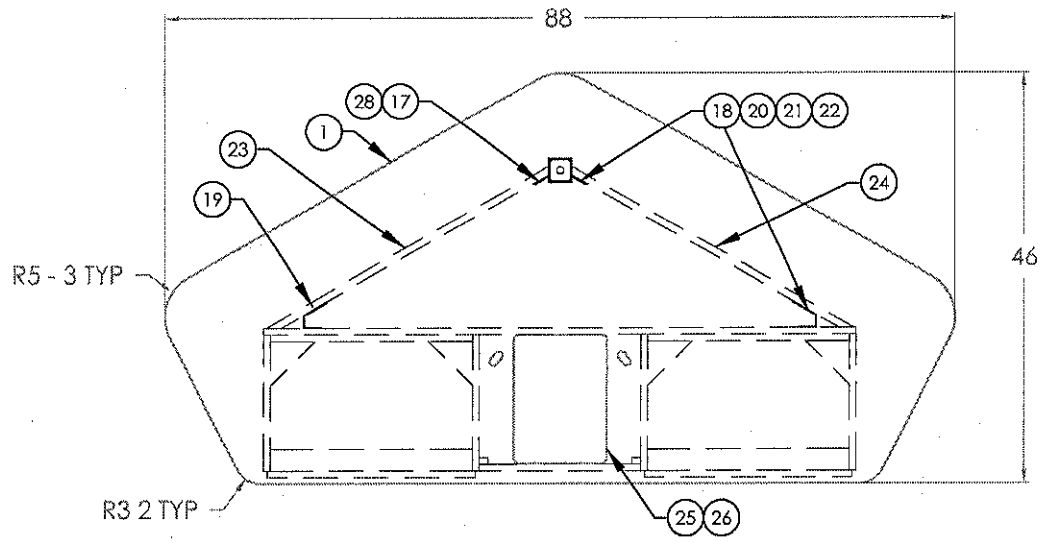

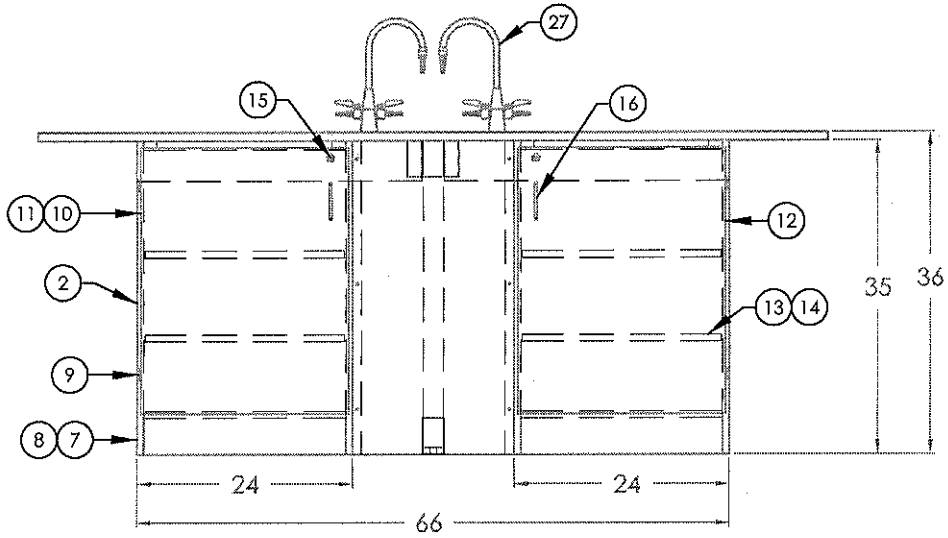

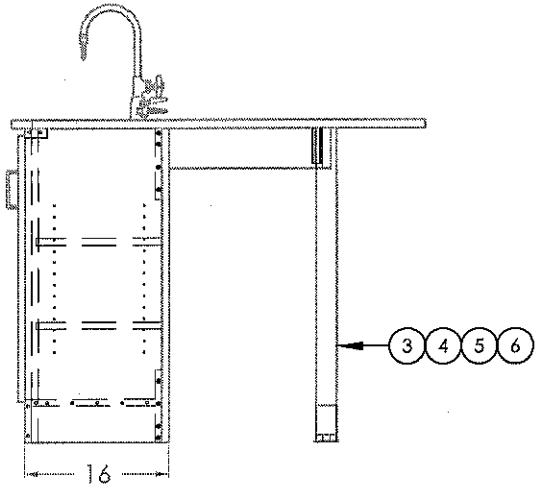

REVISIONS			
REV	DESCRIPTION	DATE	APPROVED

DWN BY: STUSCHY
DWN DATE: 11/08/2005
APR BY:
DATE APR:

THIS DRAWING IS THE SOLE PROPERTY OF DIVERSIFIED WOODCRAFTS. IT MAY NOT BE ALTERED OR CHANGED WITHOUT PERMISSION

DIVERSIFIED WOODCRAFTS, INC

TITLE: LABVISION

DRAWING NUMBER: 2944K

REVISION:

SCALE 1 = 10 | SHEET 1 OF 1 | SIZE C